Plasma Consumables

Replacement Parts Suitable For Thermal Dynamics Corp.

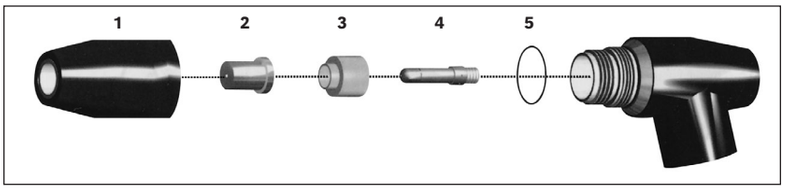

Item No.	Description	OEM Ref. No.	Part No.	Pkg. Qty.
1	Shield Cup	9-6003	**CW3969**	1
1	Shield Cup, Crown	9-6004	**CW3970**	1
1	Shield Cap	8-7500	**CW3980**	1
2	Tip, Standoff, LL	9-6500	**CW3966**	10
2	Tip, Drag, LL	9-6501	**CW3967**	10
2	Tip .047, 55A	8-7504	**CW3976**	5
2	Tip, Gouging, .073	8-7506	**CW3978**	5
2	Tip, Cutting	9-4476	**CW3991**	10

Item No.	Description	OEM Ref. No.	Part No.	Pkg. Qty.
3	Gas Distributor, LL	9-6507	**CW3965**	5
4	Electrode, Air, LL	9-6506	**CW3964**	10
4	Electrode	8-7502	**CW3973**	5
4	Electrode	8-7502	**CW3983**	5
4	Electrode	9-6006	**CW3993**	10
5	Coil Spring	9-7501	**CW3979**	1

Replacement Parts Suitable For:

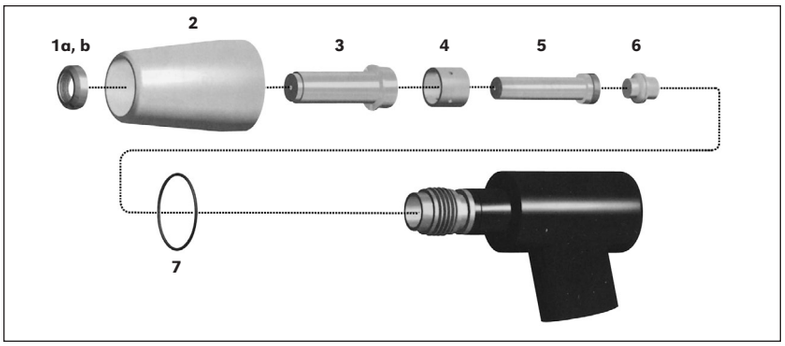

ESAB®/L-TEC®

Item No.	Description	OEM Ref. No.	Part No.	Pkg. Qty.
3	Tip, 40A	21008	**CW3995**	10
4	Swirl Baffle	20463	**CW3996**	10
5	Electrode	20862	**CW3997**	10
6	Plunger	20324	**CW3999**	5

Miller® Electric

Item No.	Description	OEM Ref. No.	Part No.	Pkg. Qty.
1a	Drag Shield	192053	**CW4009**	1
1b	Deflector	177888	**CW4012**	1
2	Shield Cap, 50A	192050	**CW4006**	1
3	Tip, 25A	176656	**CW4002**	10
3	Tip, Shielded, 50A	177890	**CW4007**	5
3	Tip, Extended	177876	**CW4008**	5
4	Swirl Ring	177886	**CW4011**	1
5	Electrode	176655	**CW4003**	10
5	Electrode	192047	**CW4010**	5
7	O-Ring	169232	**CW4005**	10